Op-Vent
A Precise, Low-Cost, Easily-Constructed Open-Source Ventilator

Covent-19 Review

June 23, 2020

Bill Dally

Chief Scientist and SVP of Research, NVIDIA Corporation

Professor (Research), Stanford University

The Need

- If COVID-19 surges somewhere in the world, we are likely to need a large number of ventilators quickly

- In the developing world, these must be inexpensive and easily manufactured

Op-Vent

- Open-Source
- Proportional Solenoid Valve
- Closed-Loop Feedback Control

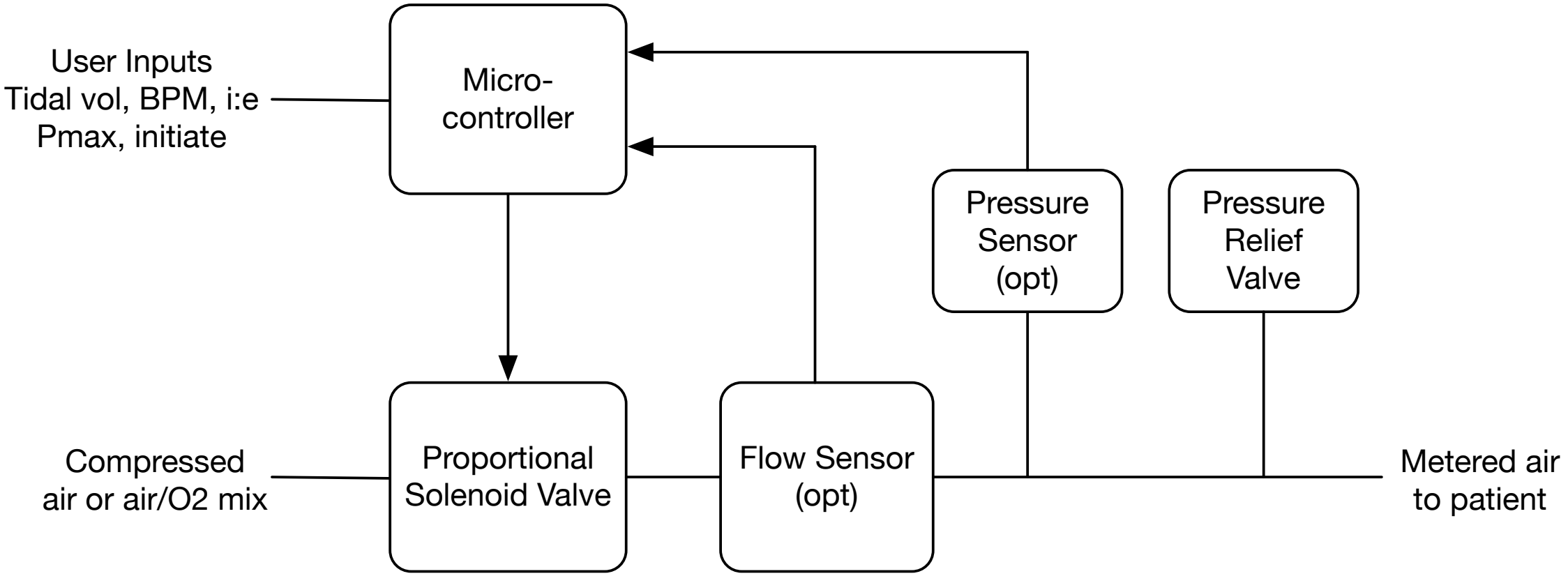

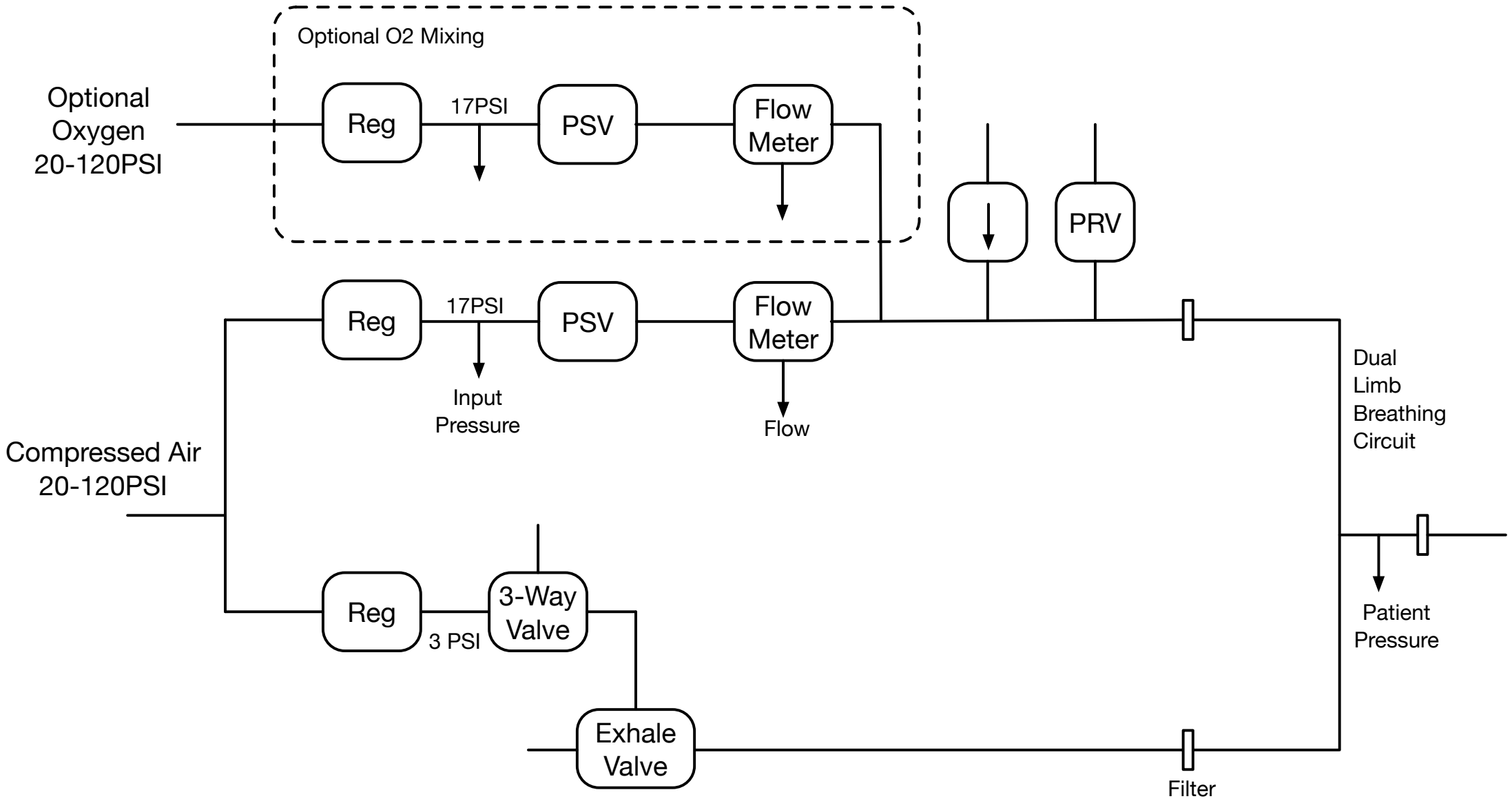
Optional O2 Mixing
Optional
Oxygen
20-120PSI
Reg
17PSI
PSV
Flow
Meter
PRV
Reg
17PSI
PSV
Flow
Meter
Input
Pressure
Flow
Compressed Air
20-120PSI
Dual
Limb
Breathing
Circuit
Reg
3 PSI
3-Way
Valve
Patient
Pressure
Exhale
Valve
Filter

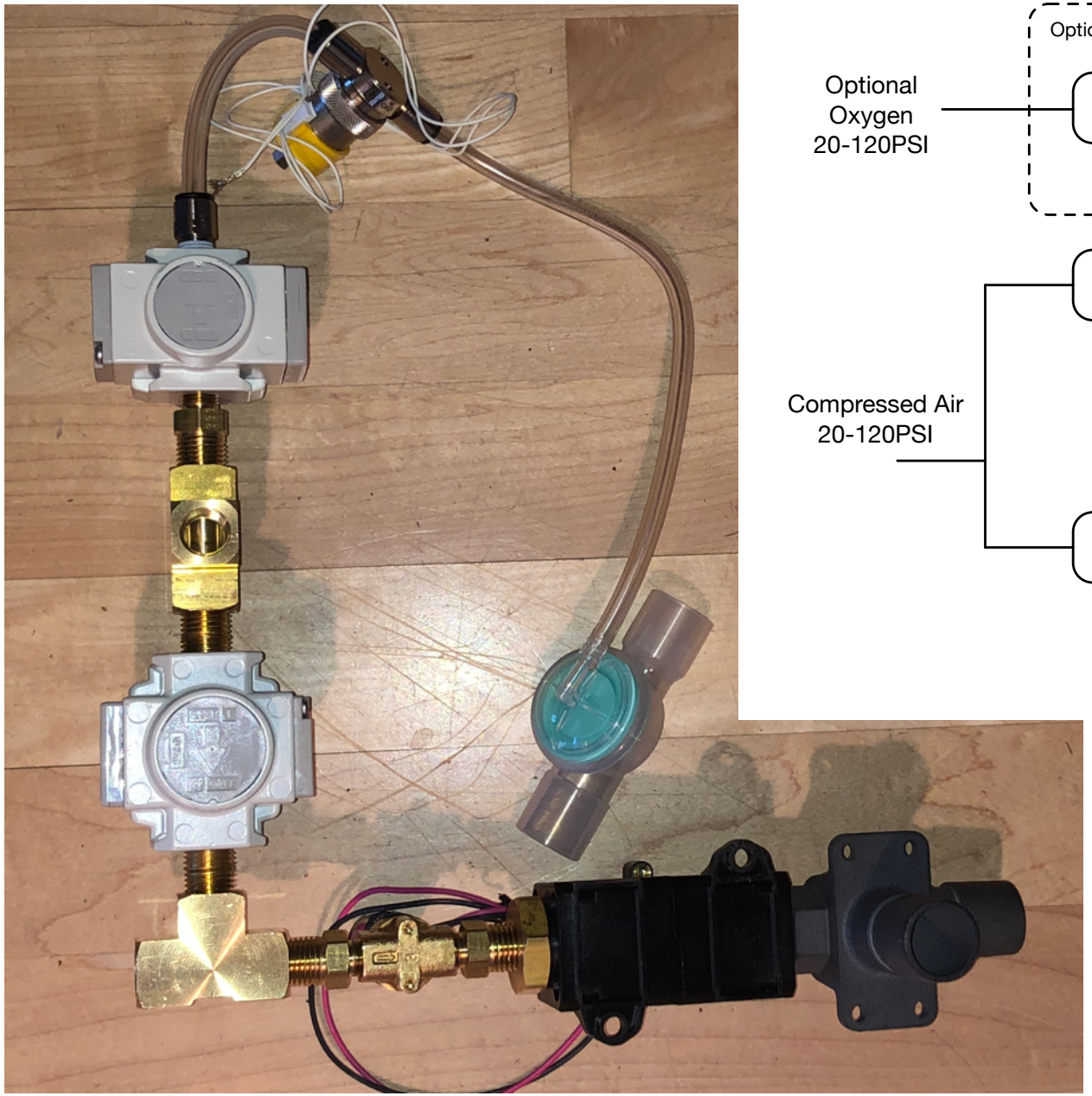

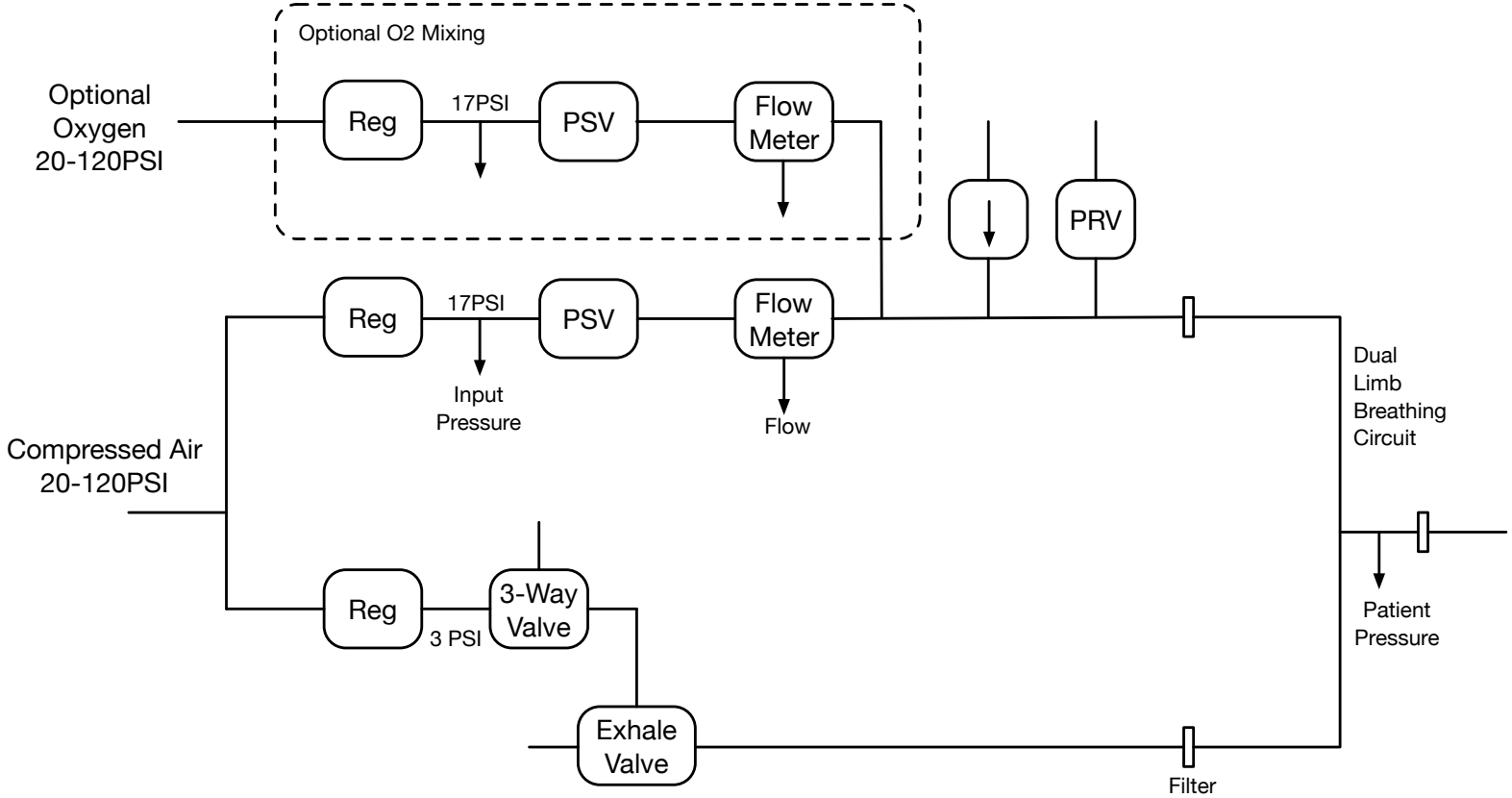
Optional O2 Mixing
Optional
Oxygen
20-120PSI
Reg
17PSI
PSV
Flow
Meter
PRV
Reg
17PSI
PSV
Flow
Meter
Input
Pressure
Flow
Compressed Air
20-120PSI
Dual
Limb
Breathing
Circuit
Reg
3 PSI
3-Way
Valve
Patient
Pressure
Exhale
Valve
Filter

2004A-V20

12V DC In
Push On
Push Reset
On
Mode
Alarm
Turn Select
Turn Adjust
20-120 PSI In
Pressure Monitor
From Patient
To Patient

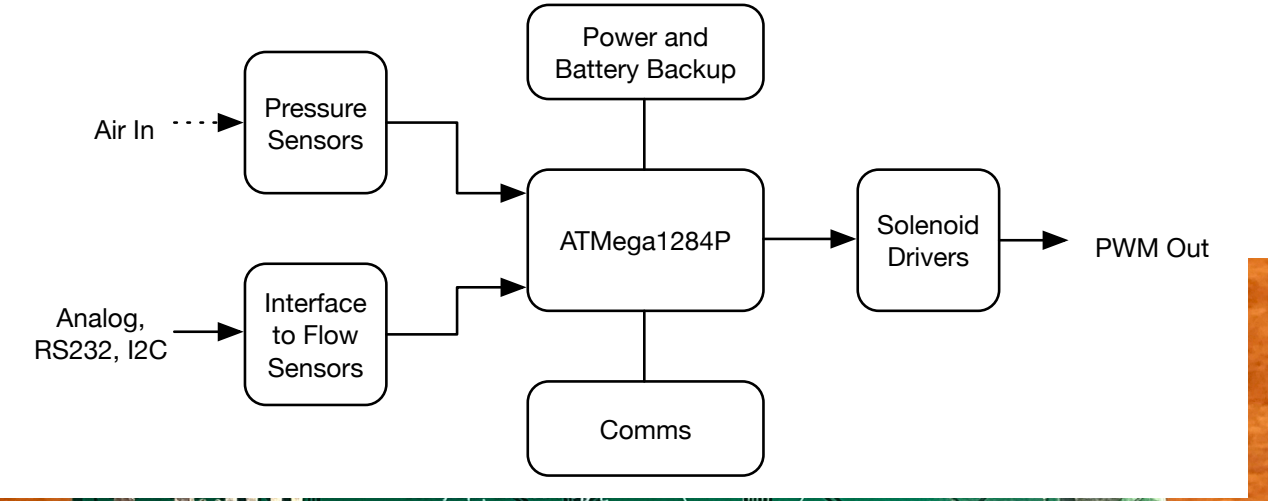
Power and Battery Backup
Air In
Pressure Sensors
ATMega1284P
Solenoid Drivers
PWM Out
Analog, RS232, I2C
Interface to Flow Sensors
Comms

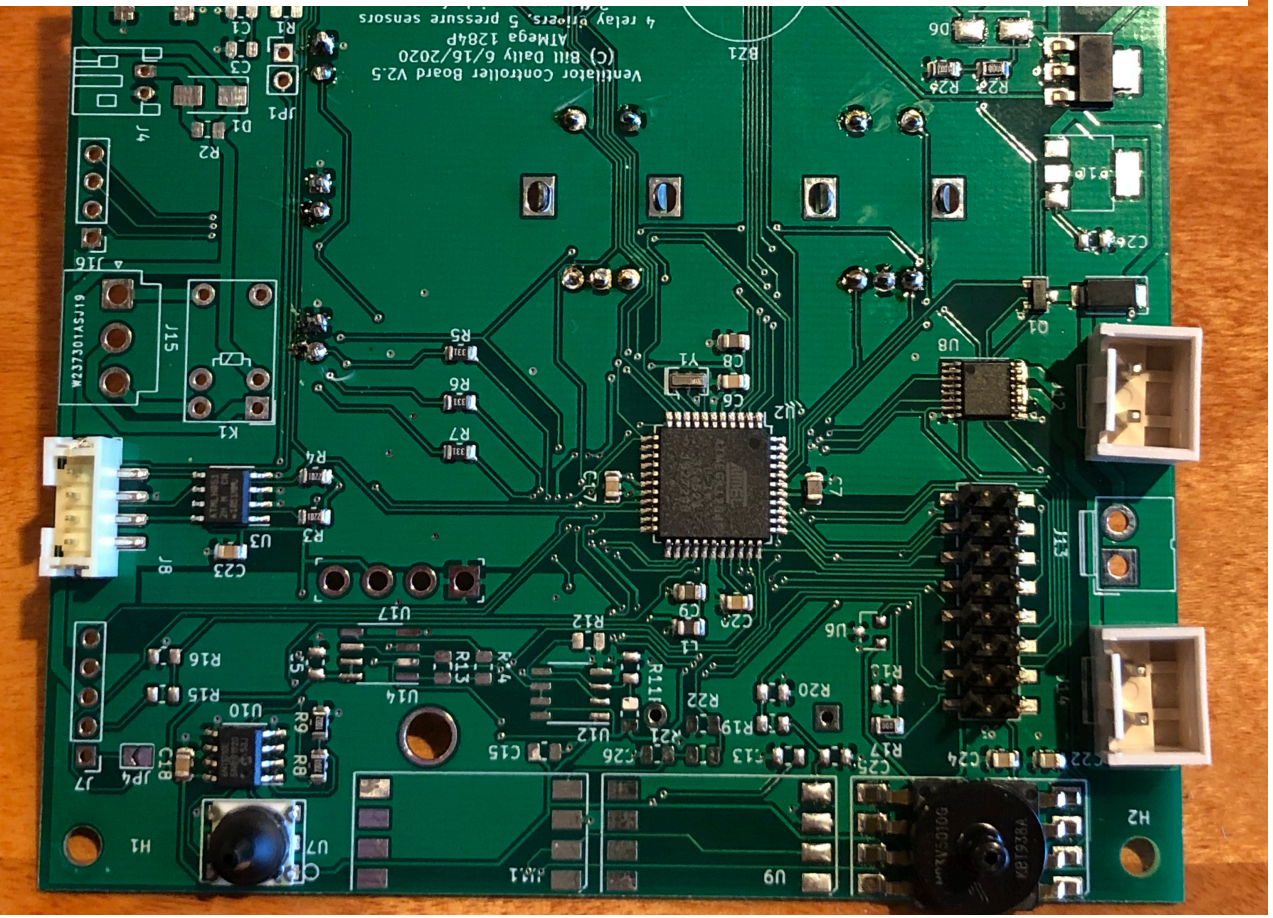

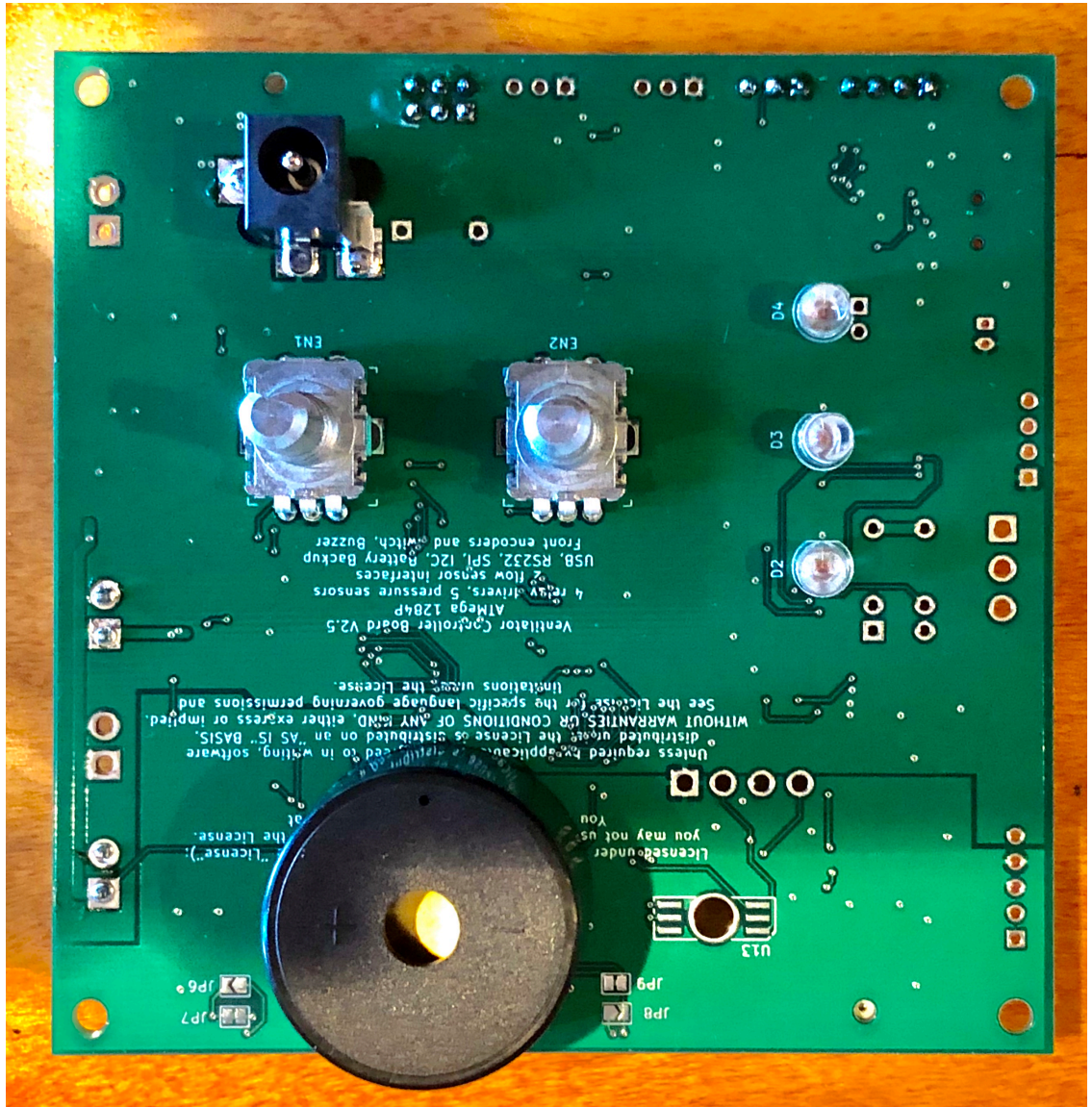

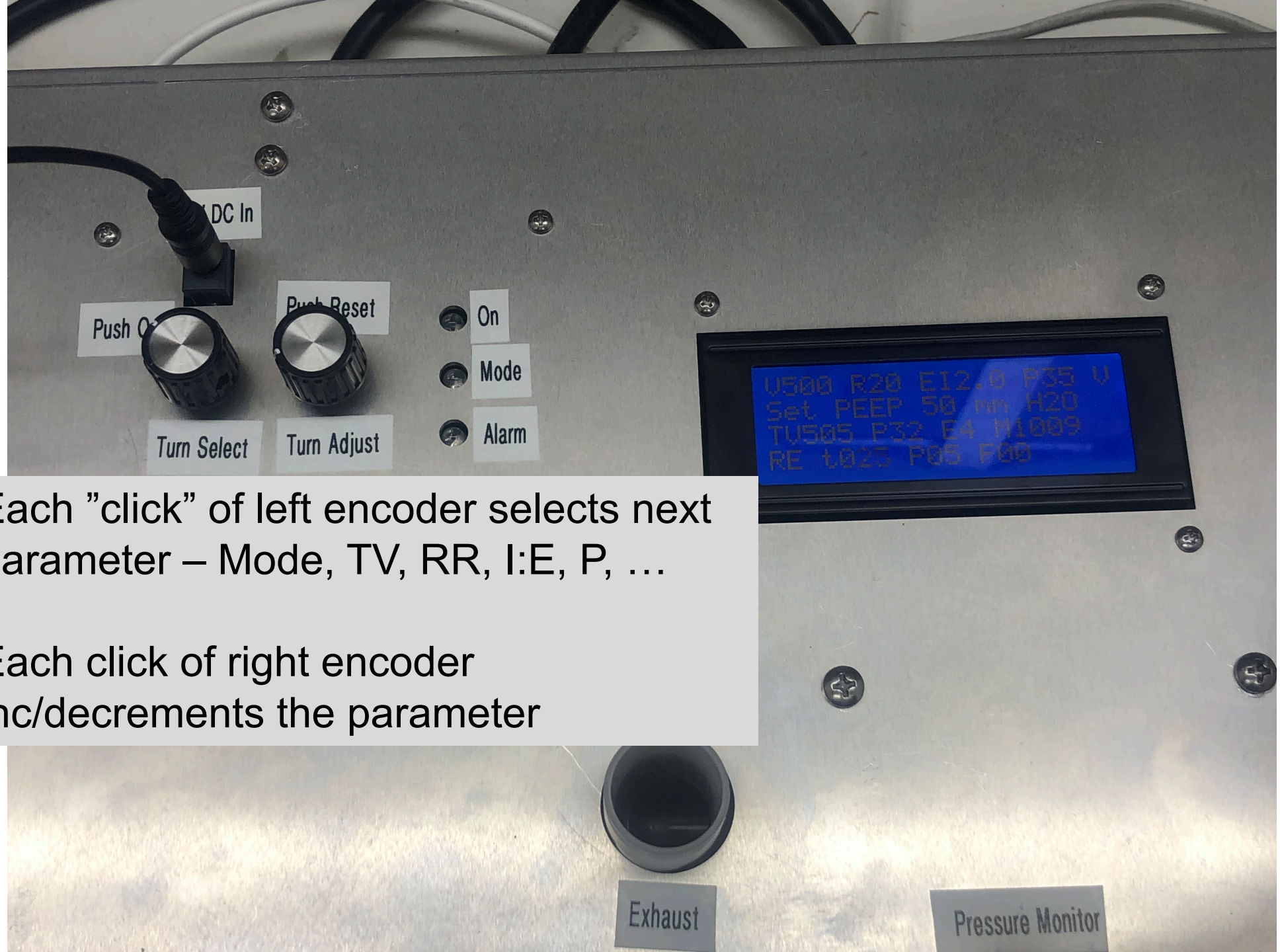

Each ”click” of left encoder selects next parameter – Mode, TV, RR, I:E, P, …

Each click of right encoder inc/decrements the parameter

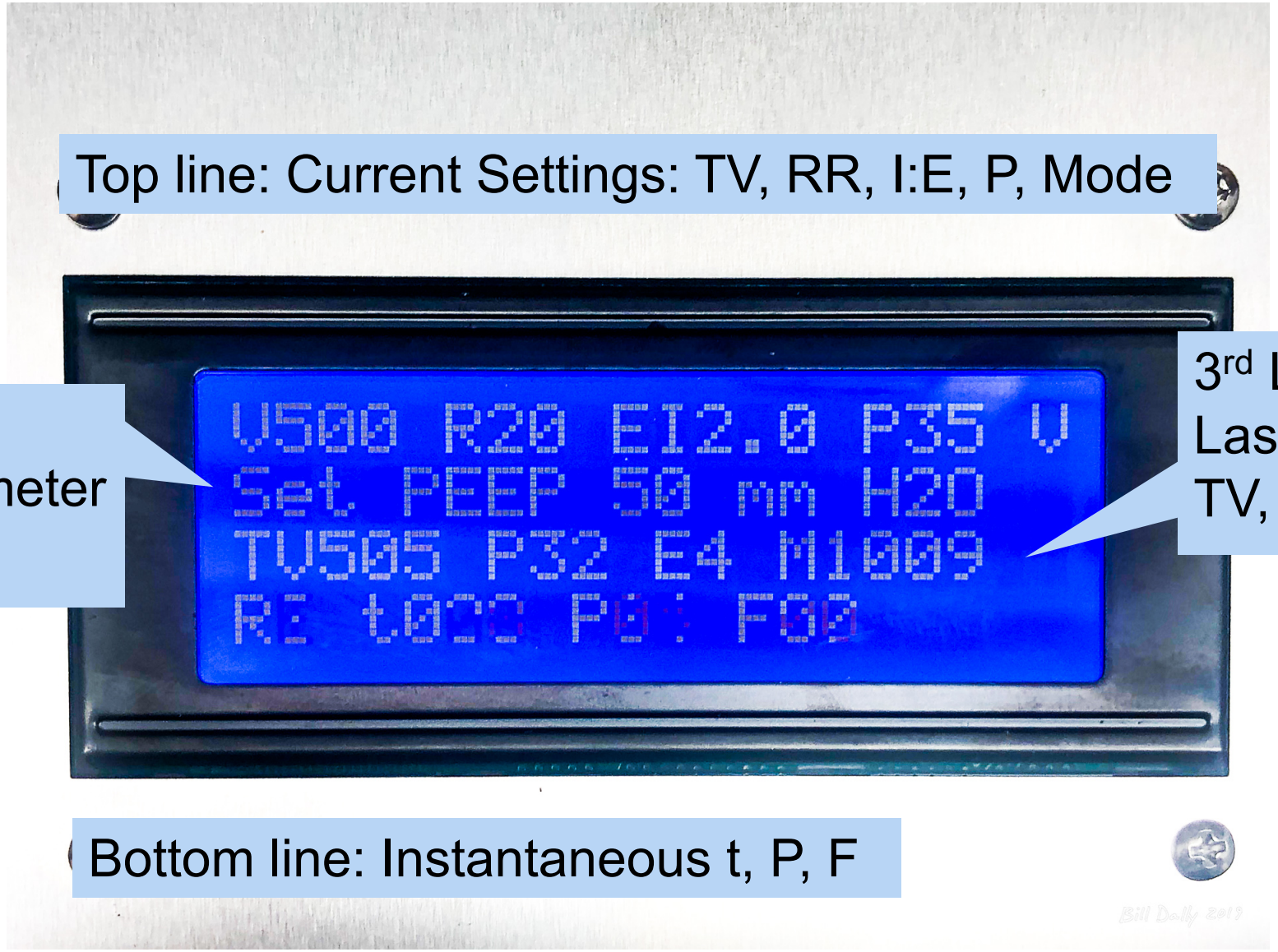

Top line: Current Settings: TV, RR, I:E, P, Mode

2nd Line:
Selected Parameter
and value

3rd Line:
Last breath
TV, PIP, PEEP, MV

Bottom line: Instantaneous t, P, F

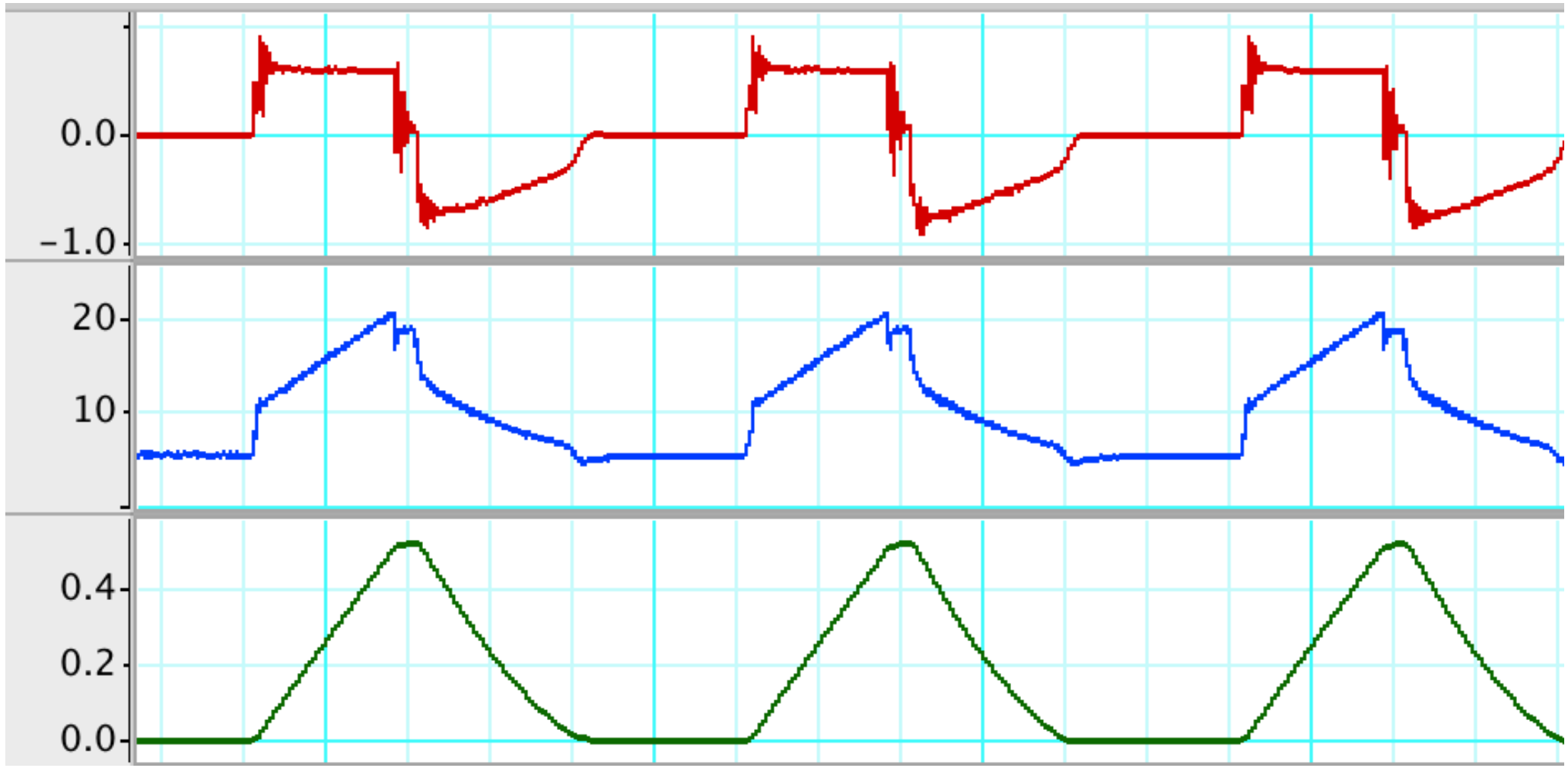
0.0
−1.0
20
10
0.4
0.2
0.0

		INPUTS							OUTPUTS												
		Test Lung Parameters		Ventilator Settings					Measured Outputs							Analysis					
Test #	Breath	Compliance (ml/hPa)	Resistance (hPa/L/s)	Tidal Volume (mL)	Set Rate (bpm)	Inspiratory Time (sec)	O2 %	PEEP (cmH2O)	Measured Tidal Volume (mL)	Max Flow Rate (Lpm)	Measured Rate (bpm)	Measured Inspiratory Time (sec)	Measured Expiratory Time (sec)	Measured O2 %	Measured PEEP (cmH2O)	Tidal Volume Error (mL)	Max Flow Rate (Lpm)	Rate Error (bpm)	Calculated I:E Ratio	O2 % Error (% O2)	PEEP Error (cmH2O)
1	1	50	5	500	20	1		5	523	54.66	19.97	1.00	2.02		5.29	-23	54.66	0.03	1:2.015	0	-0.29
	2								521	53.76	19.93	1.00	2.02		5.26	-21	53.76	0.07	1:2.015	0	-0.26
	3								520	54.762	19.89	1.00	2.01		5.23	-20	54.762	0.11	1:2.0201	0	-0.23
	4								519	54.264	19.93	1.00	2.02		5.39	-19	54.264	0.07	1:2.015	0	-0.39
	5								519	53.868	19.93	1.00	2.02		5.33	-19	53.868	0.07	1:2.0251	0	-0.33
2	1	50	20	500	12	1		10	504	63.642	11.96	1.02	4.01		9.81	-4	63.642	0.04	1:3.9313	0	0.19
	2								505	64.536	11.96	1.00	4.02		9.65	-5	64.536	0.04	1:4.02	0	0.35
	3								505	63.54	11.96	0.99	4.03		9.51	-5	63.54	0.04	1:4.0707	0	0.49
	4								503	67.3332	11.96	0.99	4.03		9.88	-3	67.3332	0.04	1:4.0707	0	0.12
	5								501	69.726	11.96	0.98	4.03		9.85	-1	69.726	0.04	1:4.1122	0	0.15
3	1	20	5	500	20	1		5	499	60.846	19.95	0.99	2.03		4.99	1	60.846	0.05	1:2.0505	0	0.01
	2								497	61.746	19.92	0.98	2.03		4.96	3	61.746	0.08	1:2.0714	0	0.04
	3								498	63.24	19.92	0.98	2.04		4.86	2	63.24	0.08	1:2.0816	0	0.14
	4								499	62.544	19.93	0.97	2.04		4.86	1	62.544	0.07	1:2.103	0	0.14
	5								500	62.544	19.94	0.97	2.03		4.76	0	62.544	0.06	1:2.0927	0	0.24
4	1	20	20	500	20	1		10	482	63.54	19.93	0.99	2.03		9.15	18	63.54	0.07	1:2.0505	0	0.85
	2								482	63.642	19.93	0.98	2.02		9.08	18	63.642	0.07	1:2.0612	0	0.92
	3								482	65.238	19.93	0.99	2.02		9.02	18	65.238	0.07	1:2.0404	0	0.98
	4								481	63.738	19.94	0.99	2.02		9.12	19	63.738	0.06	1:2.0404	0	0.88
	5								481	63.738	19.92	0.99	2.03		9.21	19	63.738	0.08	1:2.0505	0	0.79
5	1	20	20	300	20	1		5	292	40.2	19.92	1.00	2.01		5.19	8	40.2	0.08	1:2.01	0	-0.19
	2								292	40.698	19.93	1.00	2.01		5.19	8	40.698	0.07	1:2.01	0	-0.19
	3								292	40.698	19.92	1.00	2.02		5.26	8	40.698	0.08	1:2.02	0	-0.26
	4								292	41.196	19.93	1.00	2.00		5.33	8	41.196	0.07	1:2.01	0	-0.33
	5								292	40.596	19.93	1.01	2.02		5.13	8	40.596	0.07	1:2	0	-0.13
6	1	20	50	300	12	1		10	286	43.992	11.65	1.00	4.03		9.75	14	43.992	0.35	1:4.03	0	0.25
	2								287	43.29	11.93	0.99	4.02		9.98	13	43.29	0.07	1:4.0606	0	0.02
	3								287	43.392	12.07	1.00	4.02		9.75	13	43.392	-0.07	1:4.02	0	0.25
	4								287	43.392	12.14	0.99	4.03		9.68	13	43.392	-0.14	1:4.0707	0	0.32
	5								288	43.392	11.74	0.99	4.02		9.75	12	43.392	0.26	1:4.0606	0	0.25
7	1	10	50	300	20	1		10	281	66.834	19.93	0.98	2.03		9.85	19	66.834	0.07	1:2.0714	0	0.15
	2								281	66.834	19.93	0.99	2.04		9.75	19	66.834	0.07	1:2.071	0	0.25
	3								279	66.834	19.93	0.97	2.03		9.88	21	66.834	0.07	1:2.0927	0	0.12
	4								279	66.834	19.93	0.98	2.04		9.61	21	66.834	0.07	1:2.0816	0	0.39
	5								279	66.834	19.93	0.97	2.04		9.68	21	66.834	0.07	1:2.103	0	0.32
8	1	10	10	200	20	1		5	198	29.928	19.92	1.00	2.01		4.86	2	29.928	0.08	1:2.01	0	0.14
	2								198	30.024	19.92	1.00	2.02		5.06	2	30.024	0.08	1:2.02	0	-0.06
	3								198	30.024	19.93	0.99	2.01		4.99	2	30.024	0.07	1:2.0303	0	0.01
	4								198	30.624	19.93	1.00	2.01		4.96	2	30.624	0.07	1:2.01	0	0.04
	5								198	30.522	19.92	1.00	2.02		5.03	2	30.522	0.08	1:2.02	0	-0.03

Test Results

- 16 Tests – 8 volume, 8 pressure
  - With manual and electronic PEEP (32 total sets of results)
- All regulated parameters within 5% - generally within 2%
- Volumes low during pressure mode
  - Function of Lung compliance (which varied over testing)

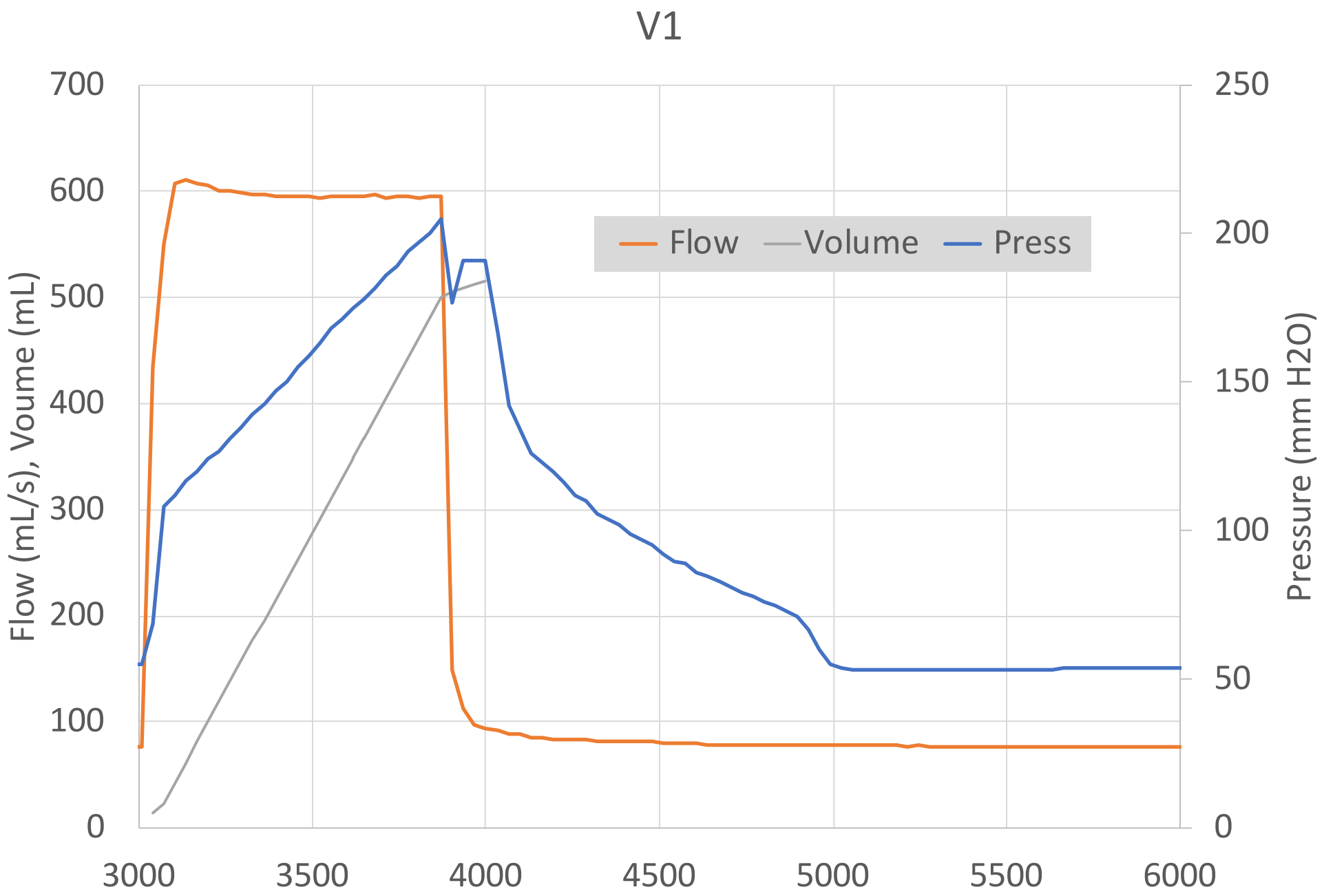
V1
Flow
Volume
Press
Flow (mL/s), Voume (mL)
Pressure (mm H2O)
700
600
500
400
300
200
100
0
250
200
150
100
50
0
3000
3500
4000
4500
5000
5500
6000

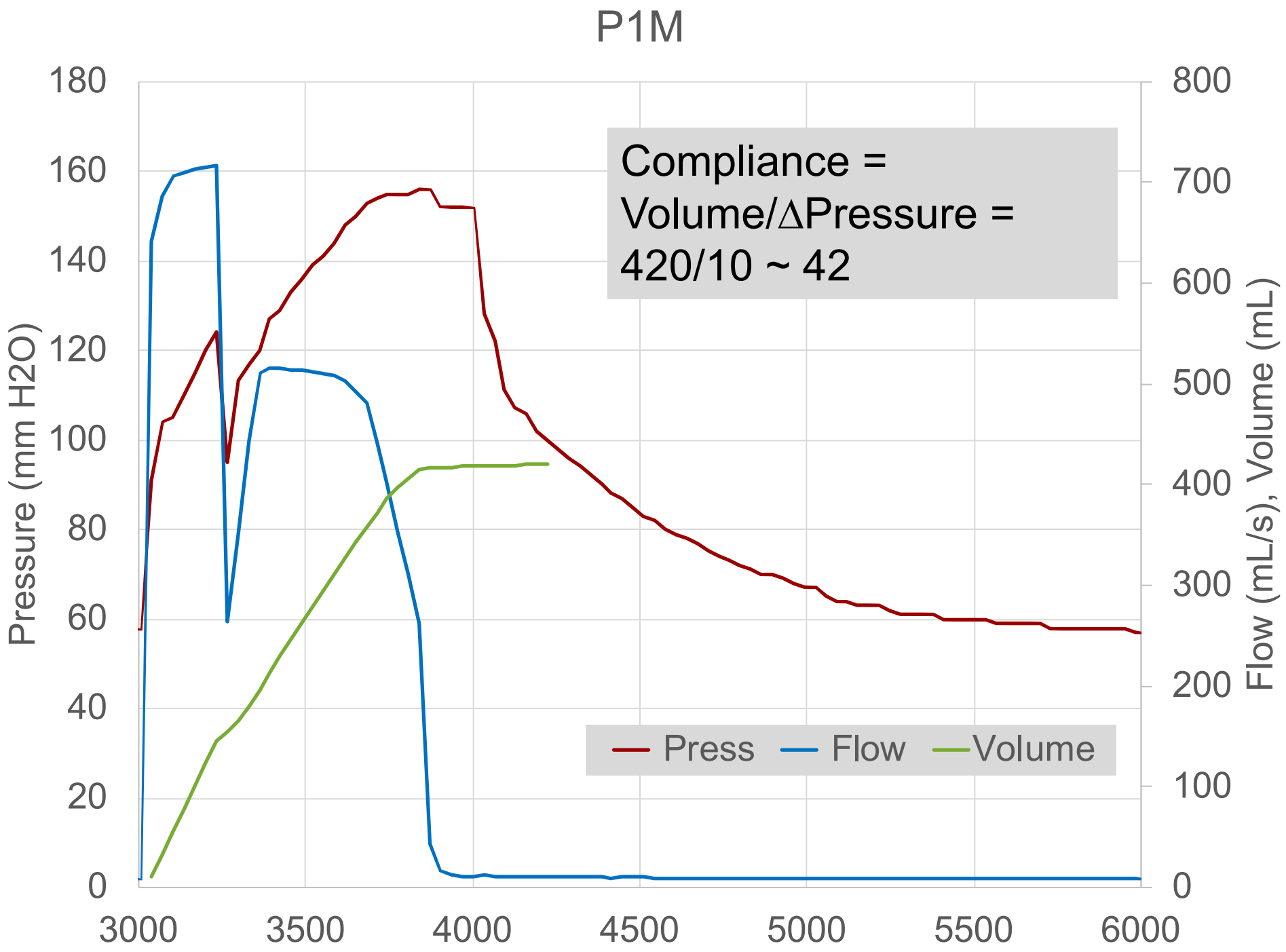
P1M
Compliance = Volume/ΔPressure = 420/10 ~ 42
Pressure (mm H2O)
Flow (mL/s), Volume (mL)
180
160
140
120
100
80
60
40
20
0
800
700
600
500
400
300
200
100
0
3000
3500
4000
4500
5000
5500
6000
Press
Flow
Volume

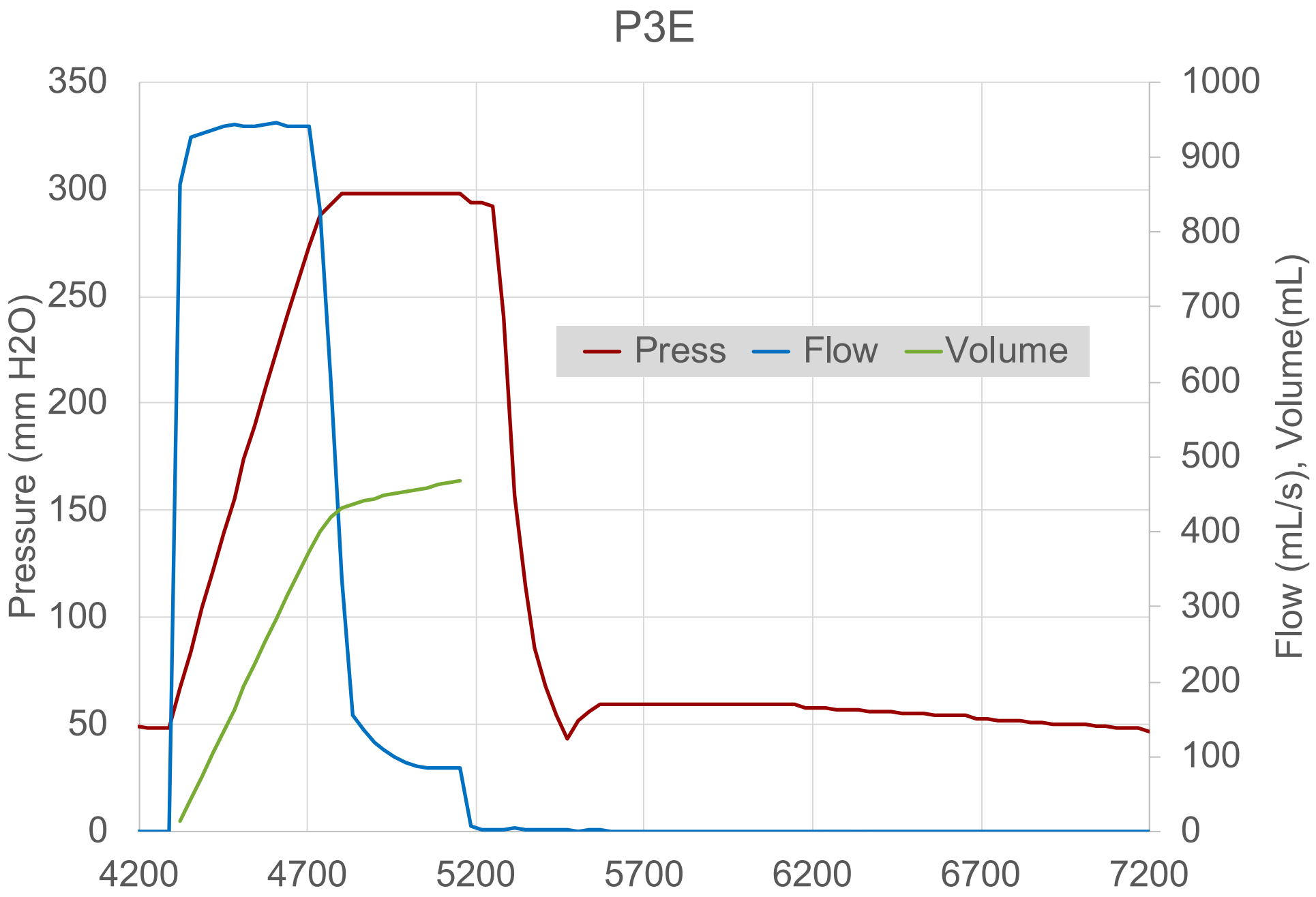
P3E
Pressure (mm H2O)
Flow (mL/s), Volume(mL)
Press
Flow
Volume
350
300
250
200
150
100
50
0
1000
900
800
700
600
500
400
300
200
100
0
4200
4700
5200
5700
6200
6700
7200

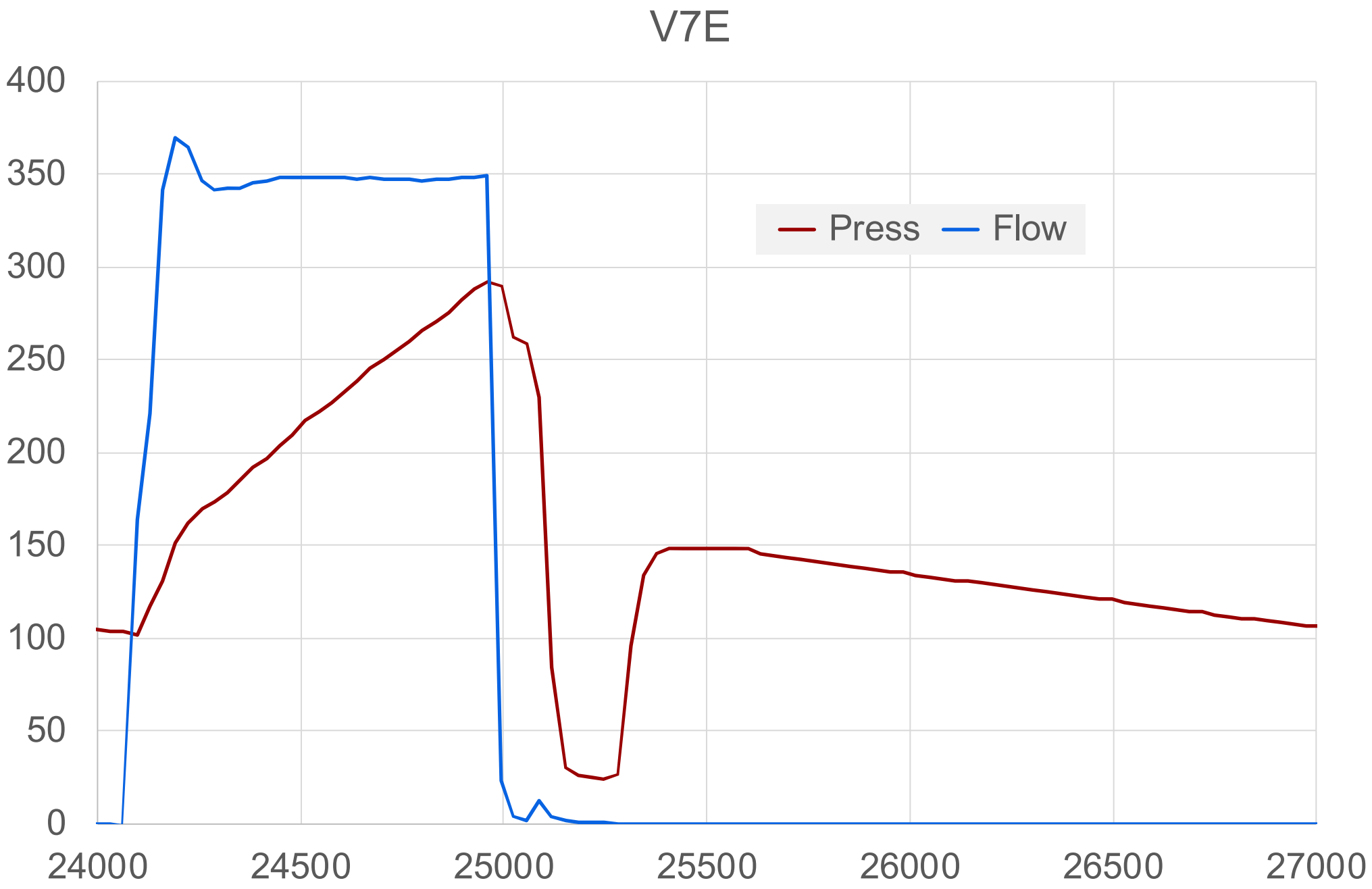
V7E
400
350
300
250
200
150
100
50
0
24000
24500
25000
25500
26000
26500
27000
Press
Flow

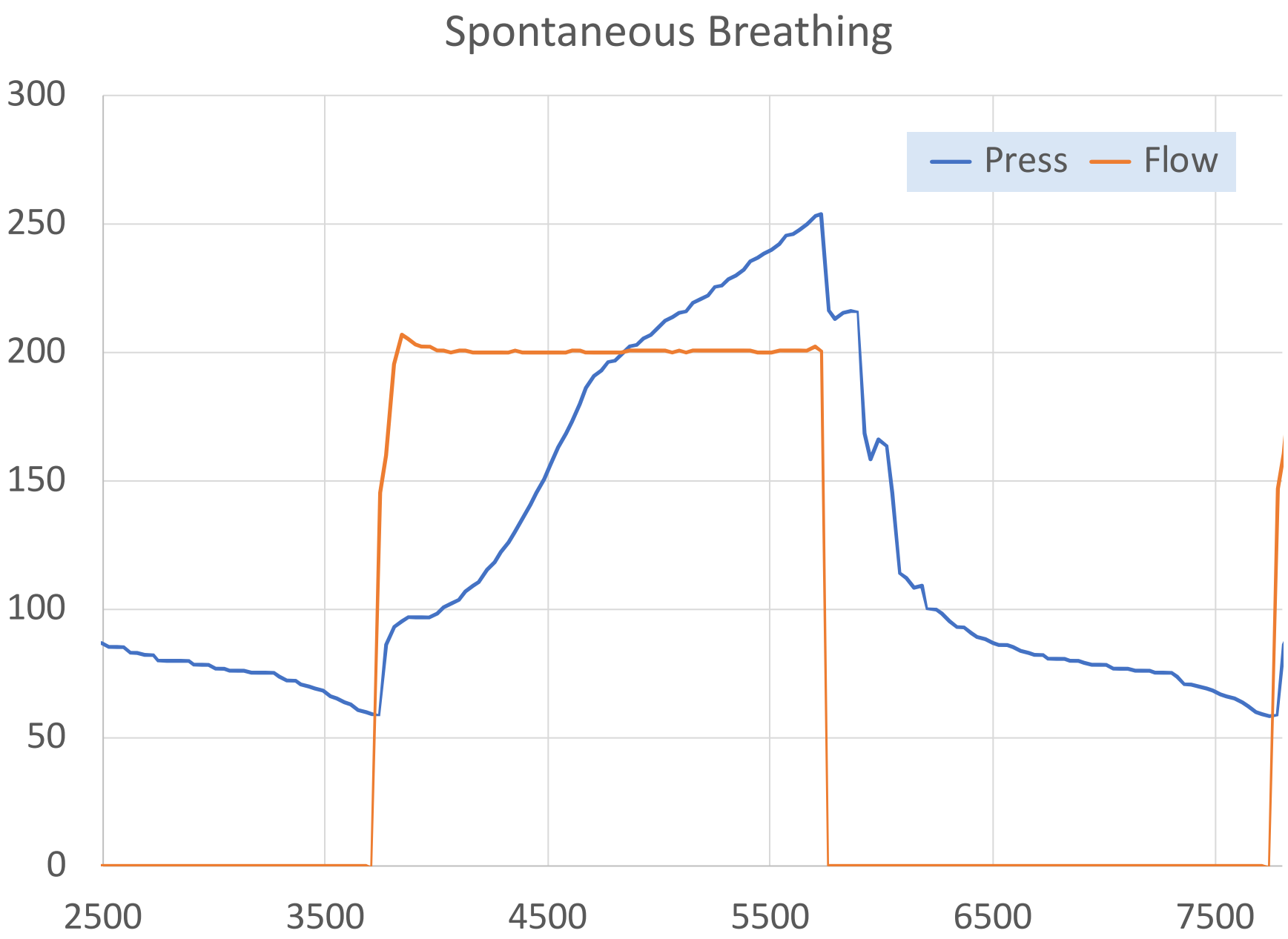
Spontaneous Breathing
300
250
200
150
100
50
0
2500
3500
4500
5500
6500
7500
Press
Flow

Post-Run Analysis: Breath by Breath Display
File
Help/Customize
Raw data (*.rwb) file path
C:\Program Files (x86)\ASL Software 3.6\ASLdata\417\gabaproto-gabapassive-test-normalpt-pt4V440RR35IE1-2-NOPEEP
RETURN
BreathType
Mechanical
Conditions
as measured
Breath
13
of
26
<<
<
>
>>
Timing
I time (s)
1.17
Insp %
28.95
Pause time (s)
0.07
Pause %
1.75
E time (s)
2.86
I/E
0.41
Trig Resp Time (ms)
-0
Insp. Flow
Peak Flow (L/min)
23.2
Median Flow (L/min)
23.0
Mean Flow (L/min)
22.4
Pressures
Ppeak (cmH2O)
10.9
Ppause (cmH2O)
10.8
Pmean (cmH2O)
3.9
PEEP (cmH2O)
0.3
Volumes Vt (mL)
Pat Insp Vt
432.6
Pat Exp Vt
424.4
Vent* Insp Vt
432.6
Vent* Exp Vt
424.4
Pat Vt - right
216.3
Pat Vt - left
216.3
*incl. correction for tubing effects as defined by aux. compensations
Flow (mouth)
Cursor 0
0.00195 22.1
Graph 1
Pressure (mouth)
Cursor 0
0.00195 3.2
Graph 2
Volume (patient)
Cursor 0
0.02734 53.2
Graph 3
3.92969

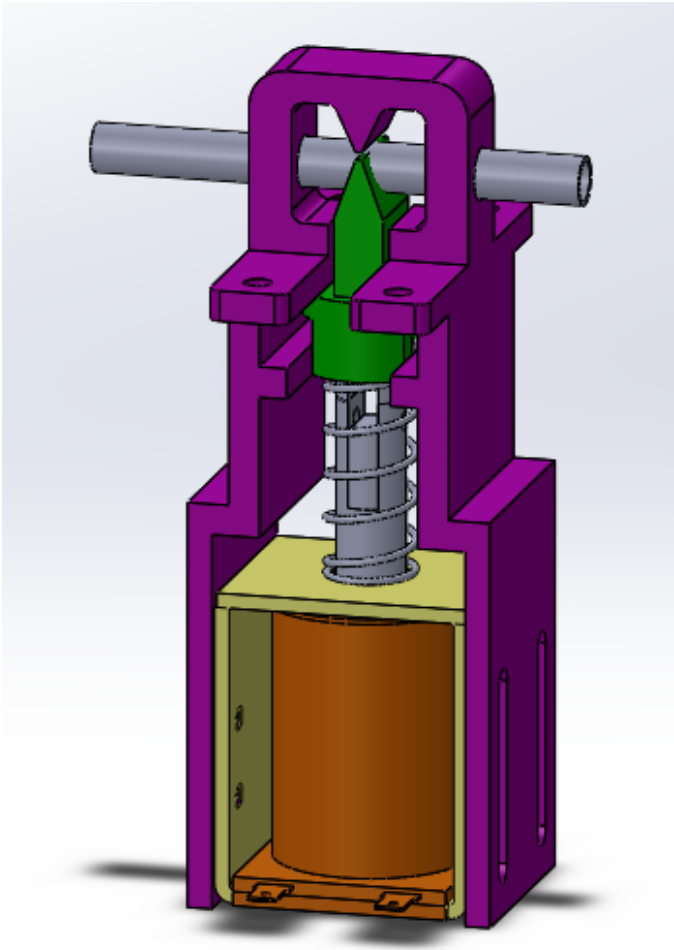

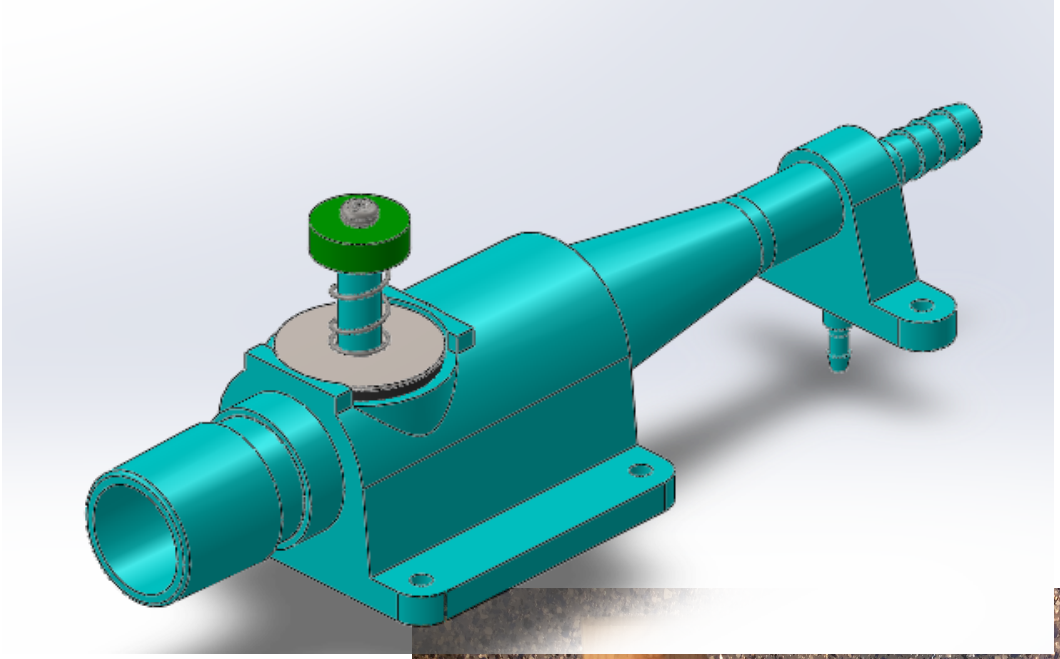

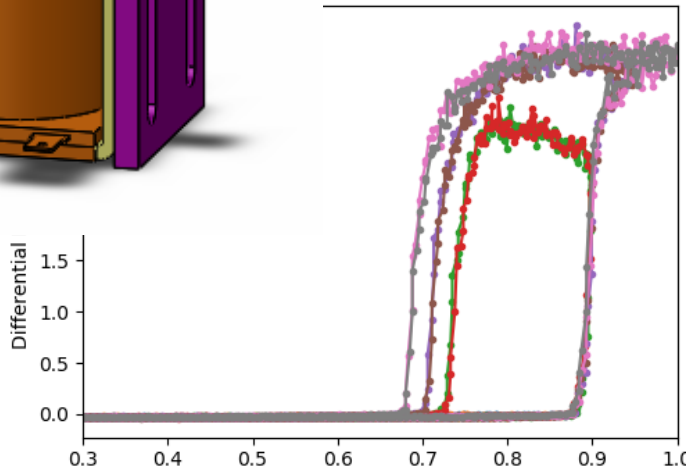
Differential
1.5
1.0
0.5
0.0
0.3
0.4
0.5
0.6
0.7
0.8
0.9
1.0

MEMS Mass Flow Sensor
Siargo Ltd.

Meets All Requirements

Number	Description	Met	Explanation
SR-01	Mandatory Ventilation	Yes	Provided by volume control and pressure control modes
SR-02	Spontaneous Ventilation	Yes	Provided by volume assist and pressure assist modes
SR-03	Volume Control	Yes	Provided by volume control mode
SR-04	Pressure Control	Yes	Provided by pressure control mode
SR-05	Pressure Support	Yes	Provided by pressure assist mode
SR-06	Apnea Backup	Yes	RR set in pressure assist and volume assist mode provides backup mandatory breaths
SR-07	>60L/m	Yes	Components rated to 70L/m. Over 90L/m measured.
SR-08	PEEP 5-15cm	Yes	PEEP can be provided either electronically (5-20cm H20) or via a PEEP valve on the exhaust port.
SR-09	I:E ratio	Yes	Settable from 2:1 to 1:4 in increments of 0.5
SR-10	Respiratory Rate 10-30	Yes	Settable 5-40 in increments of 1
SR-11	Tidal Volume (option 4)	Yes	Settable from 50-800 mL in increments of 50 mL
SR-12	Gas Connector	Yes	¼ NPT input port is compatible with high-pressure gas source 20-120PSI
SR-13	Oxygen Delivery	Option	Base unit requires external blender to keep cost low. Option can be enabled at expense of $200 BOM cost.
SR-15	Reusability	Yes	Either a disposable or resusable breathing circuit can be used. Op-Vent expiratory path is autoclavable.
SR-16	Viral Filter	Yes	Standard ISO-5356 filters are placed inline.
SR-17	Inlet Filter	Yes	A ¼ NPT particle filter may be added to the inlet.
SR-18	Cleanable	Yes	Aluminum and plastic case can be cleaned with bleach or alchohol.
SR-19	Inlet gas/Power Alarm	Yes	Both low input pressure and low voltage alarms are provided

Number	Description	Met	Explanation
SR-20	Pressure Alarm	Yes	A settable peak pressure alarm is provided. Also, a mechanical pressure relief valve is provided.
SR-21	Apnea Alarm	Yes	An apnea alarm is raised if two consecutive mandatory backup breaths are provided in assist modes
SR-22	Disconnect Alarm	Yes	A disconnect alarm is raised if PIP is below a threshold
SR-23	Total Volume Alarm	Yes	High and Low minute volume alarms are raised
SR-24	O2 Disconnect	Option	If optional O2 path is provided a low pressure alarm on that path is raised.
SR-25	Alarm Volume	Yes	Alarm used is 110dBA
SR-36	Mandatory Off Alarm	Yes	Alarm sounds for 0.5s when ventilator switched off from two mandatory modes.
SR-26	Monitoring	Yes	Measured TV, PEEP, PIP, and flow are displayed
SR-32	Power	Yes	Input power is 12V DC, 120V AC supported with wall transformer – supplied.
SR-34	Battery Labeling	Yes	Instructions make it clear there is no internal battery backup
SR-35	Battery Backup	Option	A 12V battery pack can be connected in parallel to the 12V input power with a “Y” cable – this has been tested.
SR-27	Altitude	Yes	Vent tested at 6,300 feet. Flow meter measures mass air flow.
SR-28	Durability	Yes	Solenoid valves rated to 100M cycles ~ 83,000 hours
SR-29	Compatibility	Yes	Patient connections are 22mm ISO-5356 tapers
SR-30	Ventilator Standards		Still reviewing standard
SR-33	Electrical Standards		Standards not available

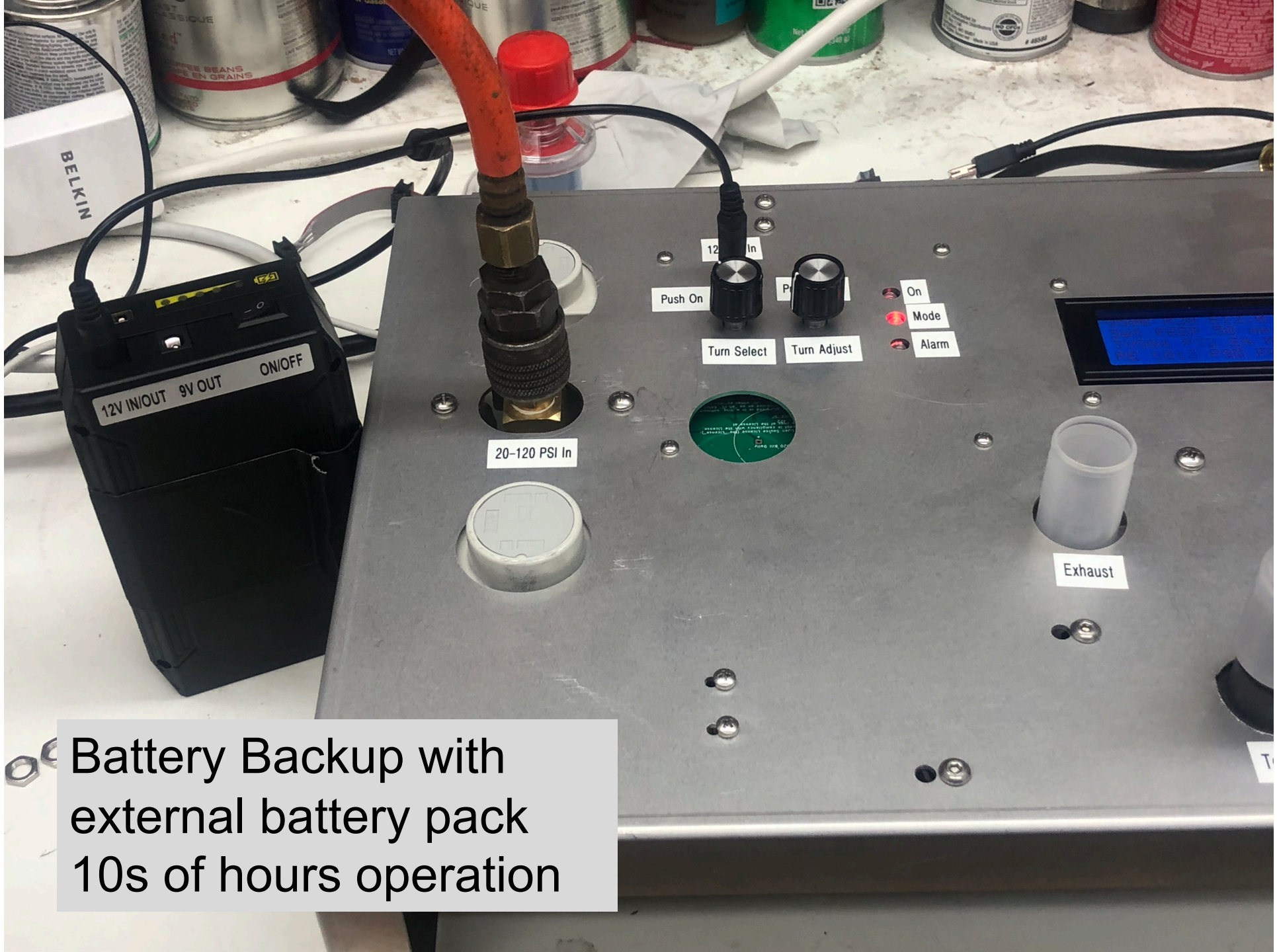

Battery Backup with
external battery pack
10s of hours operation

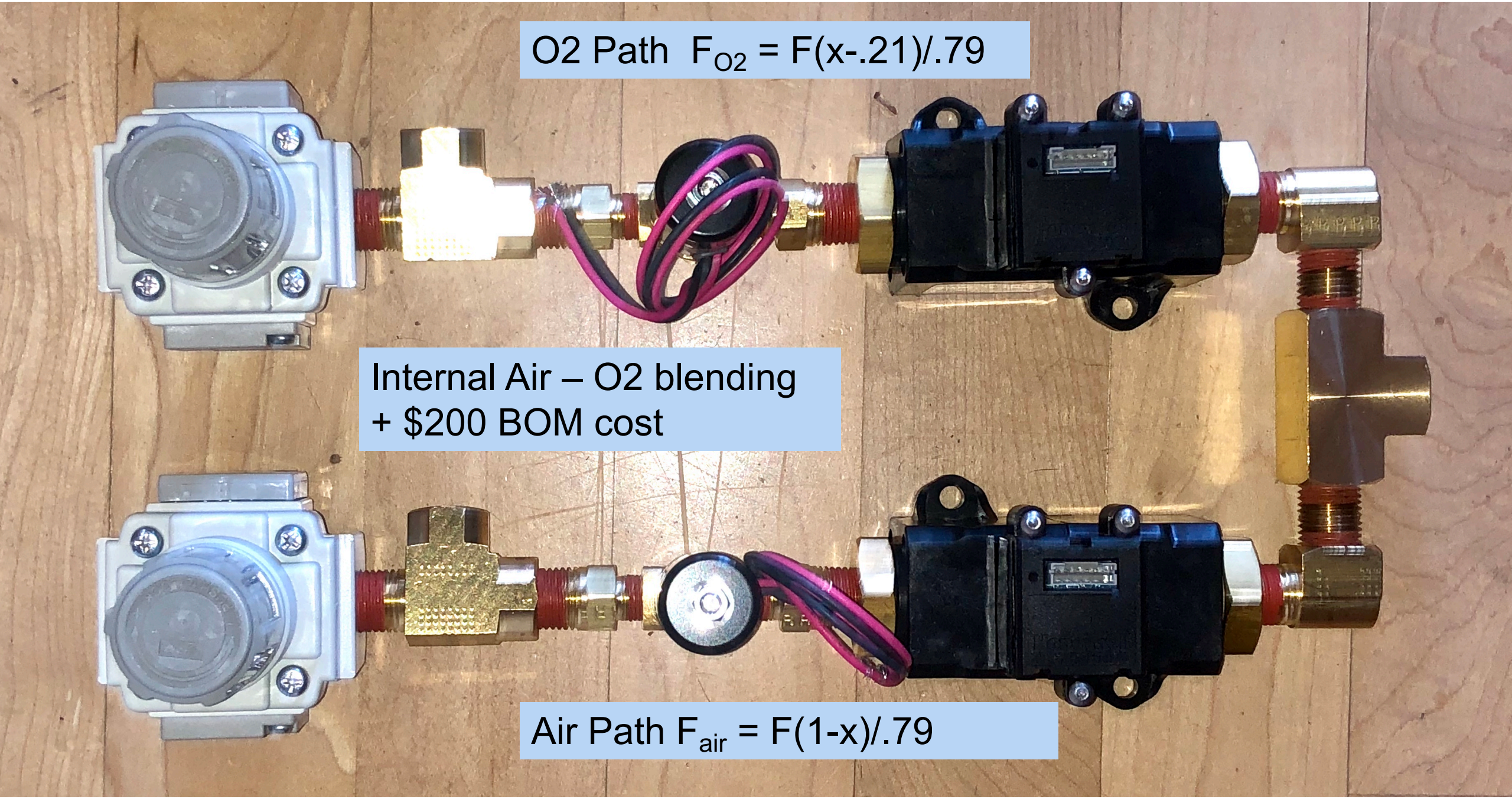
O2 Path $F_{O2} = F(x-.21)/.79$
Internal Air – O2 blending
+ $200 BOM cost
Air Path $F_{air} = F(1-x)/.79$

Why Op-Vent?

- Meets all requirements
  - Optional O2 blending
  - Optional battery backup
  - Pressure modes, spontaneous breathing, alarms
- Precise
  - Regulates flow, volume, and pressure
  - All regulated parameters within 5%, most within 2%
- Low Cost
  - BOM cost under $400 (under $600 with O_2 blending)
  - Under $150 with open-source components
- Easily Assembled
  - Pneumatics bolt together, 4 cables, 4 hoses < 30min assembly
- Easily Operated

The Op-Vent Team

Bill Dally
Chief Scientist, NVIDIA
Professor of EE and CS, Stanford

David Gaba, MD
Professor of Anesthesiology, Perioperative and Pain Medicine
Associate Dean for Immersive and Simulation Based Learning

Ruth Fanning, MD
Clinical Professor of Anesthesiology, Perioperative and Pain Medicine

Bryant Lin, MD
Clinical Associate Professor of Medicine
Co-Director, Center for Asian Health Research and Education

Manu Prakesh
Assistant Professor of Bioengineering, Stanford

Hongquan Li
Ph.D. Student, Bioengineering, Stanford

Cynthia Shum, DNP
Nurse Educator Simulationist, VA Palo Alto

Andrew Moore, MD
Chief Medical Resident

Devin Stine
Simulation Operations Specialist, VA Palo Alto

Emma Tran
Medical Student

Paul Karplus
Mechanical Engineer, Waymo

John Fox
Professor of Applied Physics, Controls

Nobie Redmon
Software Engineer, Controls

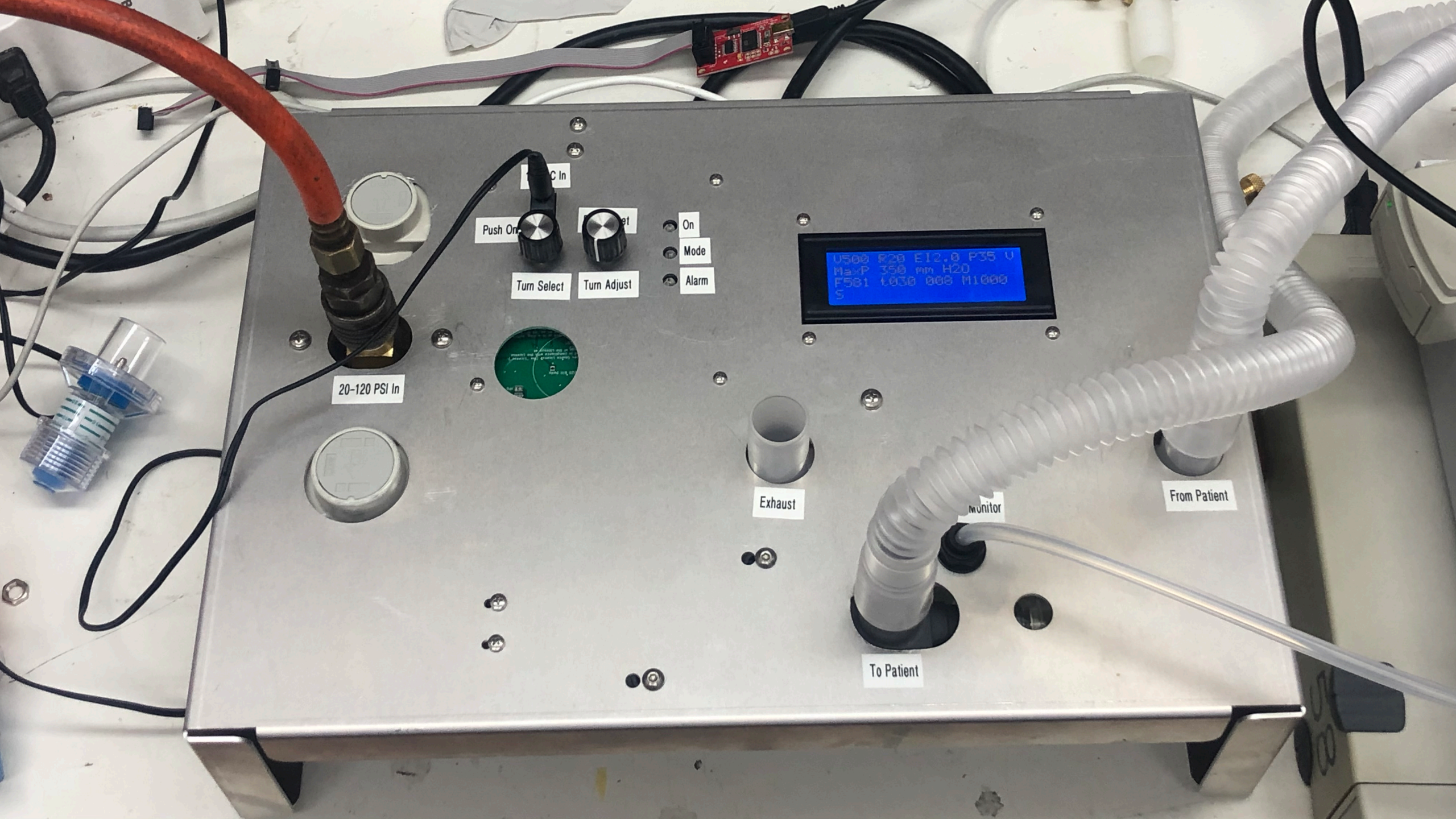
C In
Push On
et
On
Mode
Alarm
Turn Select
Turn Adjust
U500 R20 EI2.0 P35 V
MaxP 350 mm H2O
F581 t030 008 M1000
S
20-120 PSI In
Exhaust
Monitor
From Patient
To Patient